AirFlow PUMP CORP.

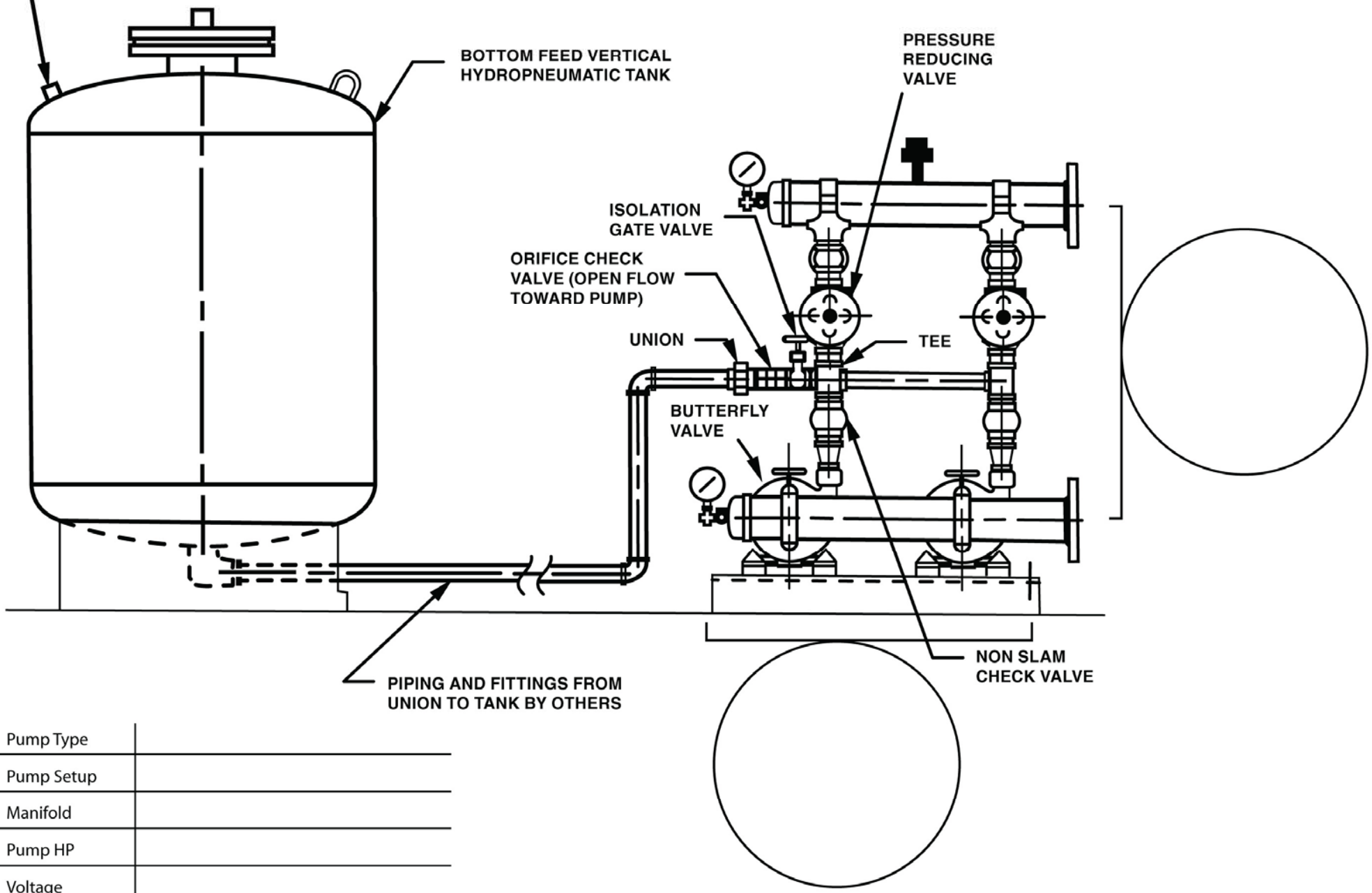

Pump Type	
Pump Setup	
Manifold	
Pump HP	
Voltage	
Cushion Tank	

Tank is not mounted on skid. Must be field mounted.